JH429G1-103-02

LOADING SCALE

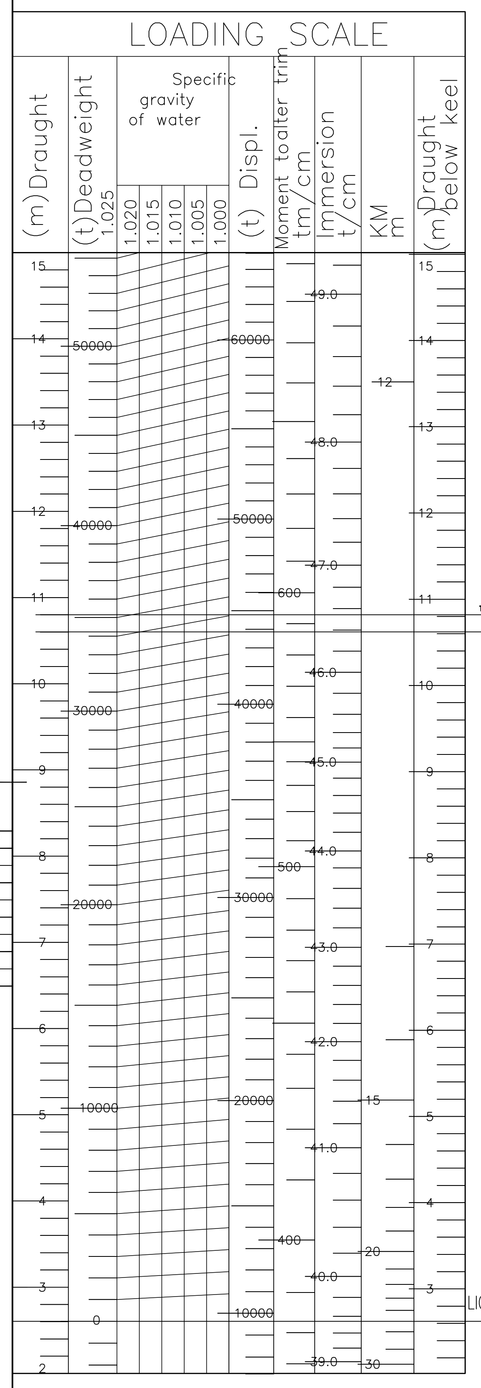

PRINCIPAL PARTICULARS

LENGTH O.A.	abt.179.90 m	DESIGNED DRAFT	10.00 m
LENGTH B.P.	171.50 m	SUMMER DRAFT	10.80 m
BREADTH MLD.	28.40 m	DEADWEIGHT (DESIGNED DRAFT)	abt. 31,500 M.T.
DEPTH MLD.	15.00 m	DEADWEIGHT (SCANTLING DRAFT)	abt. 35,000 M.T.

ON DECK CARGO WEIGHT TABLE

	DECK PART		HATCH COVER		TOTAL
	AREA(m²)	WEIGHT(t)	AREA(m²)	WEIGHT(t)	WEIGHT(t)
No.1 ON DECK	210	840	253	835	1675
No.2 ON DECK	260	1040	384	1267.2	2307
No.3 ON DECK	260	1040	384	1267.2	2307
No.4 ON DECK	260	1040	384	1267.2	2307
No.5 ON DECK	245	980	353	1166	2146
TOTAL	1235	4940	1758	5802.6	10742

Remarks:
1. Allowable designed cargo weight:
   upper deck : 4.0 t/m2
   hatch cover : 3.3 t/m2
2. Deck area including upper deck side and cross deck
   Hatch part area: ΣΣhatch opening area only.
3. Each weight in the above table is shown allowable strength weight on upper deck and hatch part at the condition of uniform load, and actural loading work should be carried out considering stablity, total longitudinal strength and etc.

EXPLANATION OF SYMBOLS

Vo	(m³):	volume not deducted for the structure in the compartment
V	(m³):	volume , V=Vo × structure factor
L.C.G.	(m):	center of volume from after perpendicular
	(+)	sign shows fore from after perpendicular
	(−)	sign shows aft from after perpendicular
V.C.G.	(m):	center of volume from baseline
Imax	(m⁴):	transverse moment of inertia of free surface

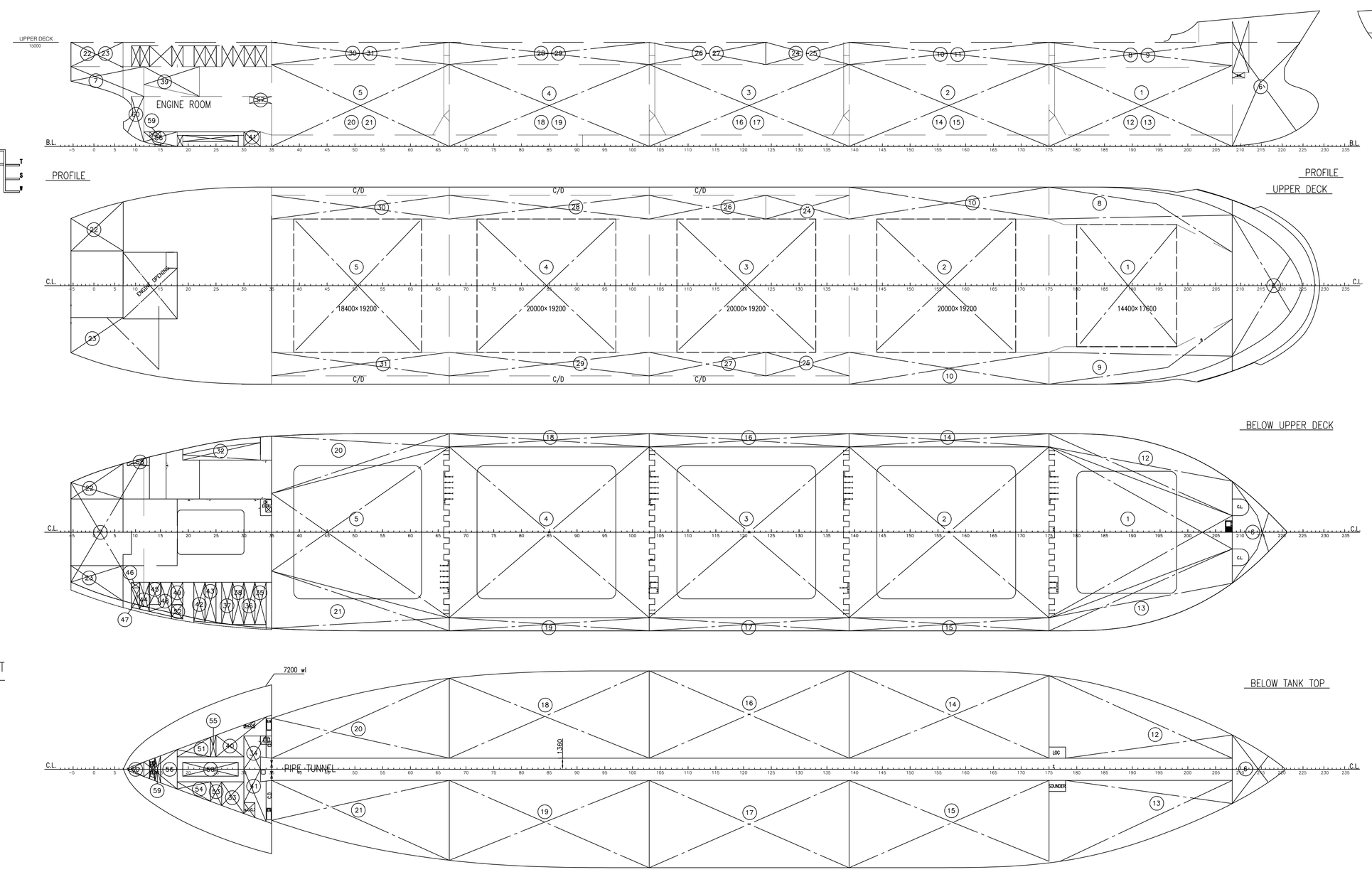

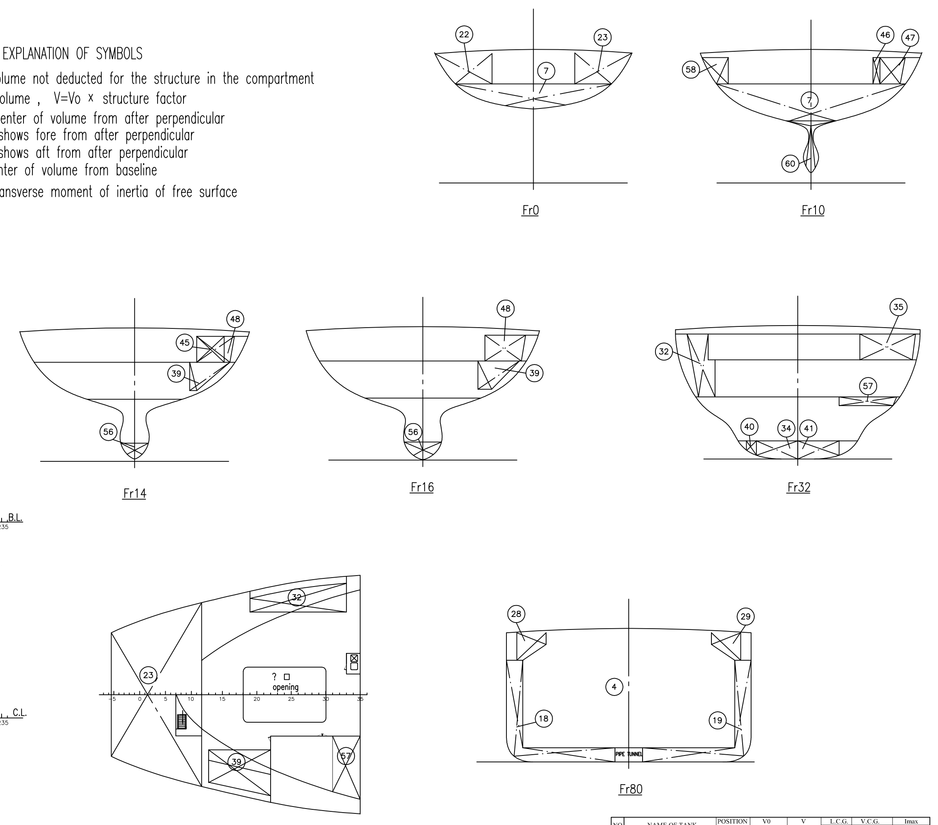

No.	NAME OF TANK	POSITION FR. NO.	Vo (m3)	V (m3)	L.C.G. (m)	V.C.G. (m)	Imax (m4)
	CARGO HOLD						
1	NO.1 CARGO HOLD	176-208	10052.4	10010.7	189.05	8.97	55740.7
2	NO.2 CARGO HOLD	130-175	10068.5	10013.1	123.16	8.73	36387.1
3	NO.3 CARGO HOLD	85-129	10068.5	10013.1	69.79	8.73	36387.1
4	NO.4 CARGO HOLD	41-84	10068.5	10013.1	19.38	8.73	36387.1
5	NO.5 CARGO HOLD	35-67	8011.7	7971.2	16.49	9.13	21267.3
	TOTAL		48249.6	48022.4	92.92	8.80	

No.	NAME OF TANK	POSITION FR. NO.	Vo (m3)	V (m3)	L.C.G. (m)	V.C.G. (m)	Imax (m4)
	BALLAST WATER TANKS	(S.G.=1.025/tons)					
6	F.P.T.	209-229	1088.8	1093.3	167.70	8.86	5411.7
7	A.P.T.	7-29	1088.8	1093.3	7.00	8.86	5411.7
8	NO.1 T.S.T.(P)	176-208	574.7	577.8	190.24	13.65	476.9
9	NO.1 T.S.T.(S)	176-208	574.7	577.8	190.24	13.65	476.9
10	NO.2 T.S.T.(P)	130-175	364.4	362.6	123.20	13.65	232.4
11	NO.2 T.S.T.(S)	130-175	364.4	362.6	123.20	13.65	232.4
12	NO.1 W.B.T.(P)	176-208	806.5	802.2	189.49	4.67	1999.6
13	NO.1 W.B.T.(S)	176-208	806.5	802.2	189.49	4.67	1999.6
14	NO.2 W.B.T.(P)	130-175	1123.9	1118.3	123.12	3.73	4675.6
15	NO.2 W.B.T.(S)	130-175	1123.9	1118.3	123.12	3.73	4675.6
16	NO.3 W.B.T.(P)	103-129	1132.0	1126.3	94.40	3.73	4767.2
17	NO.3 W.B.T.(S)	103-129	1132.0	1126.3	94.40	3.73	4767.2
18	NO.4 W.B.T.(P)	67-103	1108.1	1102.5	65.80	3.70	4667.7
19	NO.4 W.B.T.(S)	67-103	1108.1	1102.5	65.80	3.70	4667.7
20	NO.5 W.B.T.(P)	35-67	875.5	871.1	38.44	4.40	2014.6
21	NO.5 W.B.T.(S)	35-67	875.5	871.1	38.44	4.40	2014.6
	TOTAL		13230.8	13164.8	102.07	5.70	

No.	NAME OF TANK	POSITION FR. NO.	Vo (m3)	V (m3)	L.C.G. (m)	V.C.G. (m)	Imax (m4)
	FRESH WATER TANKS	(S.G.=1.000/tons)					
22	F.W.T(S.P)	209-229	185.5	262.2	0.67	13.46	196.0
23	DBL. W.TK.(S)	-2(**2)	185.5	262.2	0.67	13.46	196.0
	TOTAL		371.0	524.4	0.67	13.46	

No.	NAME OF TANK	POSITION FR. NO.	Vo (m3)	V (m3)	L.C.G. (m)	V.C.G. (m)	Imax (m4)
	FUEL OIL TANKS	(S.G.=0.900/tons)					
24	NO.1 S.F.O.(P)	124-147	105.4	103.3	132.80	13.75	38.5
25	NO.1 S.F.O.(S)	124-147	105.4	103.3	132.80	13.75	38.5
26	NO.1 F.O. (P)	103-124	147.6	144.6	88.40	13.75	53.9
27	NO.1 F.O. (S)	103-124	147.6	144.6	88.40	13.75	53.9
28	NO.2 F.O. (P)	67-103	251.0	247.9	65.60	13.75	92.4
29	NO.2 F.O. (S)	67-103	251.0	247.9	65.60	13.75	92.4
30	NO.3 F.O. (P)	35-67	224.9	220.4	38.40	13.75	82.2
31	NO.3 F.O. (S)	35-67	224.9	220.4	38.40	13.75	82.2
32	NO.2 L.S.F.O.(P)	16-33	143.4	140.6	19.33	11.37	20.4
33	F.O.DAY TK.	26-32	5.1	5.1	29.25	2.28	0.3
34	F.O.SETT. TK.	26-32	27.5	27.5	29.25	2.28	23.3
35	DI.F.O. SETT. TK.	32-38	25.2	24.7	24.00	12.09	30.8
36	DI.F.O. SERV. TK.	26-32	21.0	24.3	27.40	17.99	30.1
37	L.S.F.O. SETT. TK.	26-28	24.5	24.0	19.20	13.99	28.7
38	L.S.F.O. SERV. TK.	26-28	24.4	24.3	20.80	12.99	29.4
	TOTAL		1351.0	1316.5			

No.	NAME OF TANK	POSITION FR. NO.	Vo (m3)	V (m3)	L.C.G. (m)	V.C.G. (m)	Imax (m4)
	LUBRICATING OIL TANKS						
39	L.O.STOR.TK.	124-147	15.5	15.8	131.10	13.02	12.0
40	L.O. SETT. TK.	124-147	13.6	15.4	132.1	8.80	12.90	4.5
41	L.O. SETT. TK.	124-147	9.1	2.5	2.8	6.00	12.90	0.1
42	L.O. SETT. TK.	124-147	9.1	10.0	9.8	6.01	13.07	3.1
43	L.O. STOR. TK.	124-147	9.1	10.0	9.8	6.01	13.07	3.1
44	L.O. STOR. TK.	124-147	9.1	10.0	9.8	6.01	13.07	3.1
45	No.2 CYL.LO.STOR.TK.	124-147	15.5	15.8	131.1	12.00	12.90	4.5
46	No.2 CYL.LO.STOR.TK.	124-147	15.5	15.8	131.1	12.00	12.90	4.5
47	No.1 CYL.LO.SUMP TK.	124-147	19.9	14.4	131.1	16.80	1.15	5.2
48	No.1 CYL.LO.SUMP TK.	124-147	19.9	14.4	131.1	16.80	1.15	5.2
49	L.O.DRAIN TK.	124-147	16.4	10.4	131.1	14.94	1.19	2.3
50	L.O.DRAIN TK.	124-147	16.4	10.4	131.1	14.94	1.19	2.3
51	L.O.DRAIN TK.	124-147	16.4	10.4	131.1	14.94	1.19	2.3
52	CYL.OIL STOR. TK FOR LMO	124-147	17.9	6.6	131.1	12.01	13.74	1.8
	TOTAL		115.8	115.8				

No.	NAME OF TANK	POSITION FR. NO.	Vo (m3)	V (m3)	L.C.G. (m)	V.C.G. (m)	Imax (m4)
	OTHER TANKS						
53	CW. DRAIN TK.	24-26	6.9	6.7	17.83	1.29	3.7
54	BILGE SLUDGE TK.	16-24	10.6	10.4	14.94	1.39	3.5
55	ACCIDENT OIL DRAIN TK.	24-26	2.4	2.4	17.83	1.29	0.3
56	SLUDGE TK.	16-24	21.0	20.5	14.94	1.39	20.9
57	DI.LOGE TK.	32-35	22.1	21.6	34.03	6.31	100.2
58	SEW.SGE TK.	6-12	22.3	21.9	6.48	13.06	7.7
59	SYSTEN TUBE LO TK.	14-15	3.7	1.1	9.21	1.78	2.8
	PSTC. ⊕	7-12	18.0	17.7	6.30	8.17	10.9
	TOTAL		105.6	103.8			

SHIP NAME:POLARIS MELODY
IMO NO:9455387

BUILDER	NANJING DONGZE SHIPYARD CO.,LTD	HULL NO.	DZ06H-15
OWNER		CLASS	KR
TITLE	35,000 DWT BULK CARRIER	FINISHED PLAN	
DESIGNED	CAPACITY PLAN	DWG. No.	JH429G1-103-02 REV
CHECKED			
VERIFIED		SCALE	1:250
APPROVED		WEIGHT	1/1
		PAGE	
		DATE	2011.11.24

BESTWAY
SHANGHAI BESTWAY MARINE ENGINEERING DESIGN CO.,LTD
111 Cao Bao Road ShangHai, CHINA P.C:200233
Tel:86-21-6436 5500 Fax:86-21-5448 7783
Email: luckway@mail.online.sh.cn

線?: 0.75㎜